File Management System

Submitted by:

Sadia (25), Zahra (26), Nayyab (65)

(Reg.No.2023-UOk-03625, 2023-UOk-03626, 2023-UOk-03665)

Submitted to: Mr. Mehtab Mushtaq

Version 02 submitted for semester project

Subject: OPERATIN SYSTEM

Date of Submission: 13 Feb, 2026

Session: 2023-2027

DEPARTMENT OF CS & IT

FACULTY OF COMPUTER AND ENGINEERING

UNIVERSITY OF KOTLI AZAD JAMMU AND KASHMIR.

File Management System

Submitted By:

Sadia (25), Zahra (26), Nayyab (65)

(Reg.No.2023-UOk-03625, 2023-UOk-03626, 2023-UOk-03665)

Submitted to: Mr. Mehtab Mushtaq

Subject: OPERATIN SYSTEM

Session: 2023-2027

Date of Submission: 13 Feb, 2026

DEPARTMENT OF CS & IT

FACULTY OF COMPUTER AND ENGINEERING

UNIVERSITY OF KOTLI AZAD JAMMU AND KASHMIR.

Table of Contents

1. REQUIREMENT SPECIFICATION 1
1.1 Functional Requirements 1
1.2 Non-Functional Requirements 1
2. SOFTWARE ARCHITECTURE DIAGRAM 2
2.1 Presentation Layer Architecture 3
2.2 Business Logic Layer Architecture 4
2.3 Data Management Layer Architectur 5
2.4 Service Layer 6
2.5 Role of Cross-Cutting Table 7
3. LAYERED ARCHITECTURE DIAGRAM 8
3.1 File Detail Table 9
3.2 File Allocation Table (FAT) 9

Table of Figures

Figure 2.1: Presentation Layer 3
Figure 2.2: Business Logic Layer 4
Figure 2.3: Data Layer 5
Figure 2.4: Service Layer 6
Figure 2.5: Cross Cutting 7
Figure 3.1: Complete Layered-Based Architecture of File Management System 8

1. REQUIREMENT SPECIFICATION

This section describes the functional and non-functional requirements of the File Management System. These requirements define what the system should do and the constraints under which it should operate. The layered architecture of the system is designed according to these requirements.

1.1 Functional Requirements

• The system shall allow the user to create a file with specific permissions (Read-only, Read/Write, Execute).

• The system shall allow the user to delete an existing file.

• The system shall allow the user to write data into a file using:

- Append mode
- Overwrite mode

• The system shall allow the user to read file content.

• The system shall allow the user to change file permissions.

• The system shall allow the user to rename an existing file.

The system shall maintain file metadata including name, creation date, modification date, size, and permissions.

• The system shall manage memory blocks using a File Allocation Table (FAT).

• The system shall allocate free blocks in constant time using a queue.

• The system shall list all files and show detailed file information.

1.2 Non-Functional Requirements

• The system shall be modular using a layered architecture.

• The system shall provide efficient memory utilization within 20MB space.

• The system shall minimize internal and external fragmentation.

• The system shall allocate free blocks in O(1) time complexity.

• The system shall be reliable and produce accurate file management results.

• The system shall be maintainable and easy to enhance in future versions.

• The system shall run efficiently on a standard computer system.

2. SOFTWARE ARCHITECTURE DIAGRAM

The File Management System is designed using a multi-layered architecture. The system is divided into logical layers where each layer performs a specific responsibility and interacts only with its adjacent layer.

This architectural design improves:

- Separation of concerns
- Modularity
- Maintainability
- Performance
- Scalability

The architecture consists of the following layers:

1. Presentation Layer
2. Application / Business Logic Layer
3. Data Management Layer
4. Storage Layer

The overall data flow starts from user commands, moves through file operation processing, interacts with metadata and memory management modules, and finally updates the storage layer.

2.1 Presentation Layer Architecture

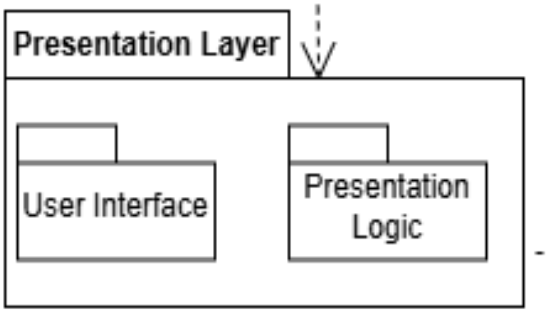

Figure 2.1: Presentation Layer

This layer represents the user interaction part of the system. It accepts user commands and displays system responses.

User Interface (UI):

The User Interface is the part of the system that users can see and interact with directly. It includes buttons, forms, menus, and screens. Its role is to take input from the user and display output or information back to the user in a clear and understandable way.

Presentation Logic:

Presentation Logic controls how data is shown on the screen. It processes the user input received from the User Interface and decides how the information should be displayed. It formats data, manages screen flow, and ensures that the output is properly presented to the user.

Over all Role of Presentation Layer:

The Presentation Layer acts as a bridge between the user and the system. It handles user interaction and ensures that information is displayed in a user-friendly and organized manner.

2.2 Business Logic Layer Architecture

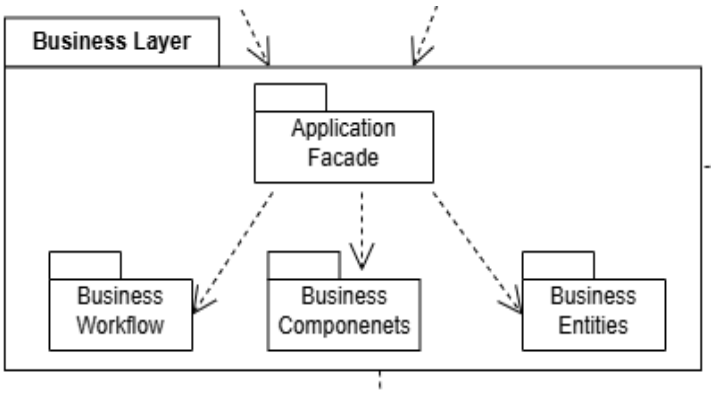

Figure 2.2: Business Logic Layer

This layer acts as the core controller of the system. It processes user commands and applies file system logic.

Application Facade

- Main entry point of business layer.
- Connects user (presentation layer) with system logic.
- Receives commands like create, delete, read, write.
- Sends commands to workflow or components.
- Makes communication between layers simple.

Business Workflow

- Step-by-step process of file operations.
- Handles tasks like create, delete, read, write, change permissions.
- Makes sure operations follow proper rules.
- Organizes commands so system works smoothly.

Business Components

- Modules that perform specific tasks.
- Examples: file handling, permission management, memory allocation.
- Helps system stay organized, reusable, and easy to maintain.

Business Entities

- Main data objects in the system.
- Store file information like name, size, date, permissions, block location.
- Send data between business layer and data layer.
- Make file storage and retrieval accurate and easy.

2.3 Data Management Layer Architectur

This layer manages all file data and storage structures of the system. It stores file information (metadata) and controls how files are saved in memory. It also manages memory blocks and ensures fast and efficient file storage and retrieval.

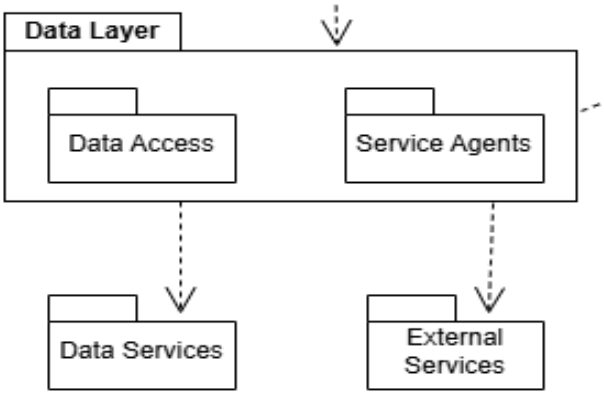

Figure 2.3: Data Layer

Data Access:

Data Access is responsible for connecting the system with the database.

It reads, writes, updates, and deletes data from the database.

It ensures that data is stored and retrieved correctly.

Service Agents:

Service Agents act as a bridge between the system and external services.

They send requests to external systems and receive responses.

They help the application communicate with outside services like APIs or web services.

Data Services:

Data Services manage the internal data of the system.

They handle database operations and ensure data is available when needed.

They provide data to other layers of the application.

External Services:

External Services are services outside the system.

These include payment gateways, third-party APIs, or external servers.

The system connects with them to get or send important information.

Over all Role of Data Layer:

The Data Layer manages all data storage and communication with databases and external services.

It ensures that data is stored safely and provided to the system when required.

2.4 Service Layer

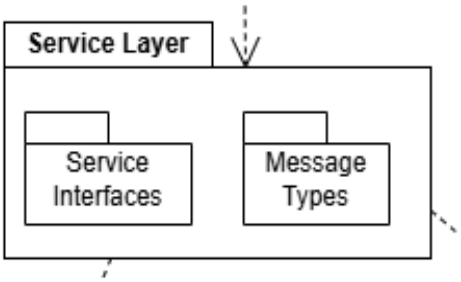

Figure 2.4: Service Layer

1. Service Interfaces:

Service Interfaces allow communication between different systems.

They define how data and requests are sent and received.

They help the system connect with external systems smoothly.

2. Message Types:

Message Types define the format of messages or data sent between systems.

They ensure that information is sent in a proper and understandable way.

They help systems communicate clearly without errors.

2.5 Role of Cross-Cutting Table

- Provides security to all layers.
- Maintains logging of system activities.
- Handles error detection and error messages.
- Improves performance and efficiency.
- Ensures smooth communication between layers.
- Provides validation and monitoring for system.
- Helps system remain reliable and secure.

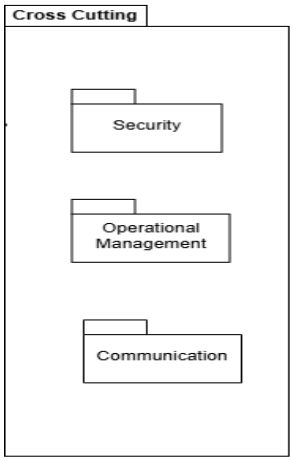

Figure 2.5: Cross Cutting

Performance Monitoring:

- Improves system speed.
- Ensures fast file processing.
- Optimizes memory usage.
- Maintains system efficient

Validation:

- Checks user input.
- Ensures correct commands.

- Prevents wrong data entry.
- Helps system run smoothly

3. LAYERED ARCHITECTURE DIAGRAM

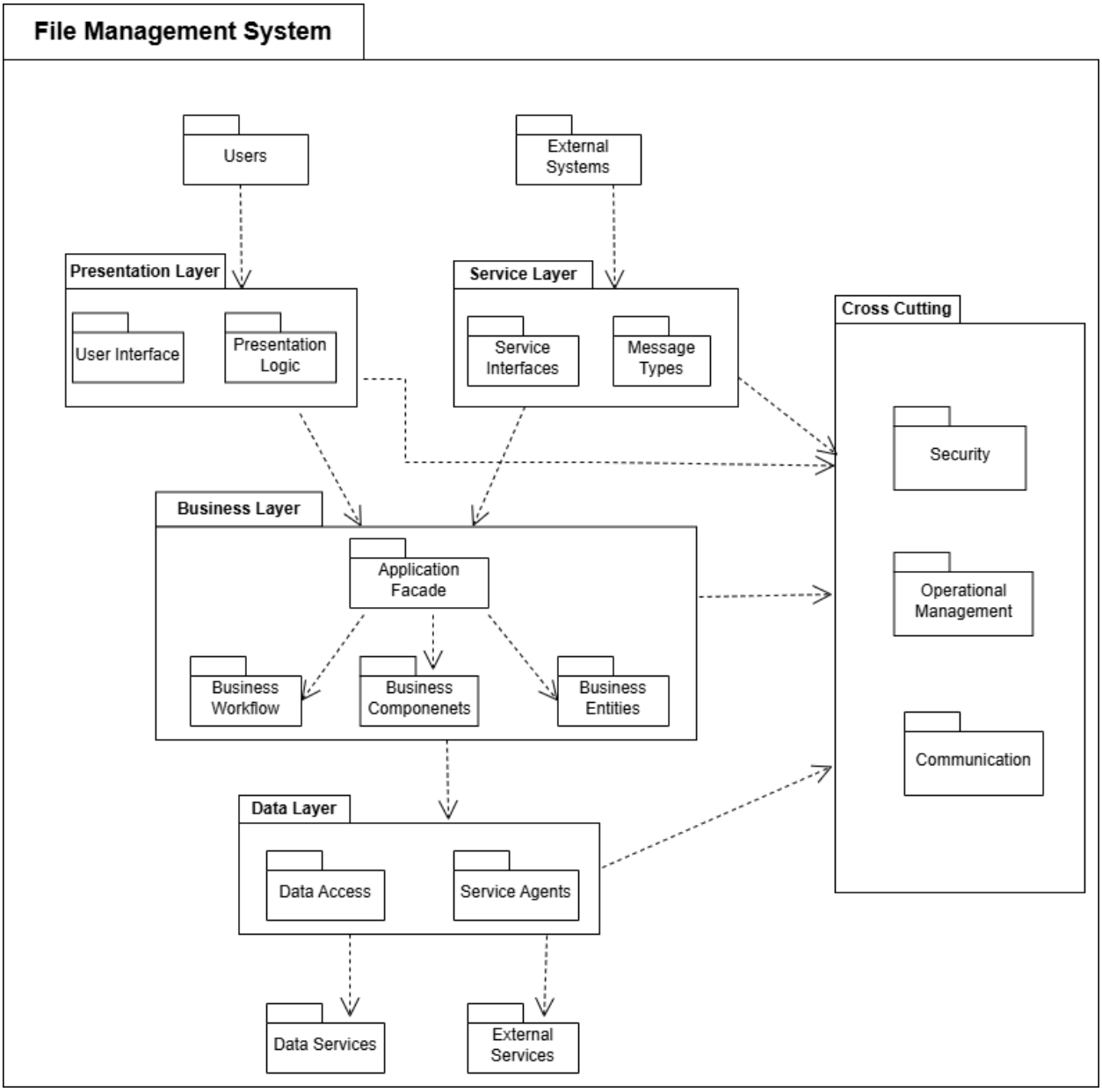

Figure 3.1: Complete Layered-Based Architecture of File Management System

3.1 File Detail Table

Each file entry contains:

- File Name (10 bytes)
- Creation Date & Time (12 bytes)
- Last Modification Date & Time (12 bytes)
- File Size (3 bytes)
- File Permission (1 byte)
- Starting Block Number (3 bytes)
- End Position in Last Block (1 byte)

Total size per entry = 42 bytes
Maximum entries allowed = 13,250
Total memory used ≈ 544 KB

3.2 File Allocation Table (FAT)

- Total blocks = 163,840
- Each FAT entry = 3 bytes
- Total FAT size ≈ 480 KB

FAT stores the address of the next block of a file. This allows non-continuous memory allocation and removes external fragmentation.